VENTILATION

TECHNICAL DATASHEET

General information

Connector for universal plenum air valve

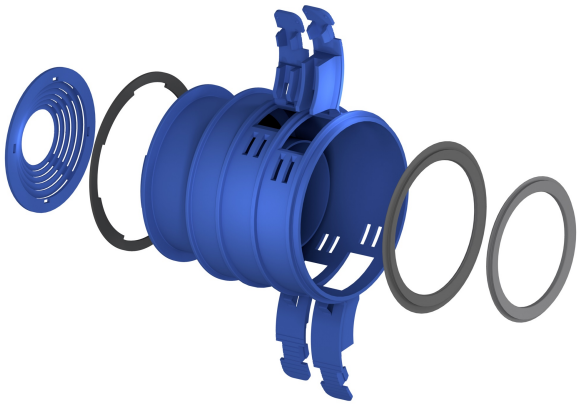

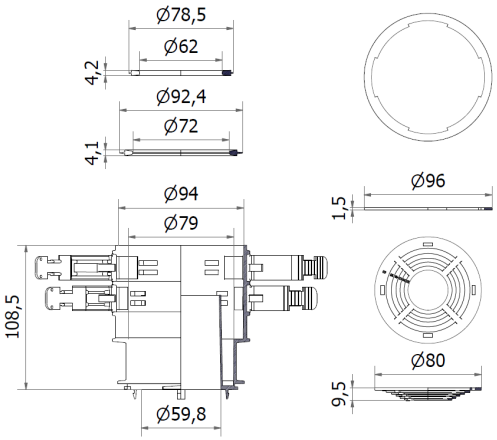

Specifications

Article number	HBCU 02
Product category	Connection piece
Material	Polypropylene
Colour	Blue
Weight (kg)	0,120

Dimensions

Dimensions (l x w x h mm)	104 x 104 x 116
Connection diameter flexible (mm)	75 / 90

Application Insights

Application	Air
Supply / Extract	Supply/Extract

Technical Specifications

Maximum air flow (m3/h)	50
R-value (m2K/W)	0
Other specifications	-

Rev. 1.0 • March 2026 • Specifications subject to change without notice